FRONT SPLASH GUARDS
JEEP WRANGLER

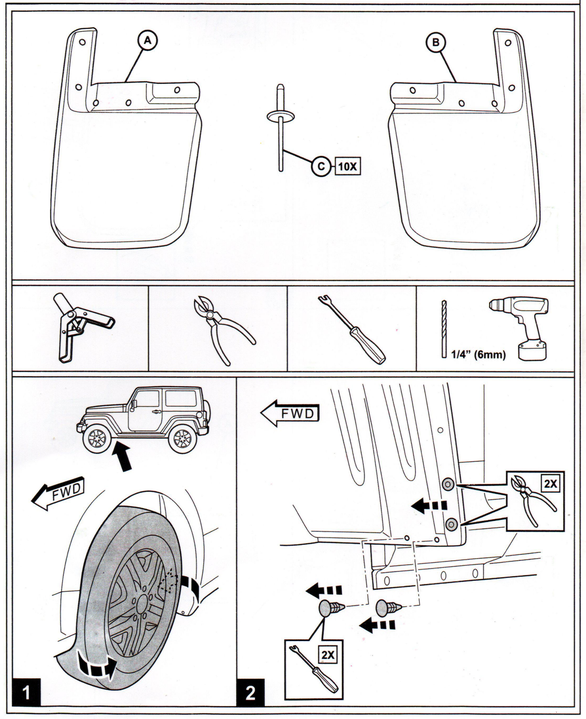

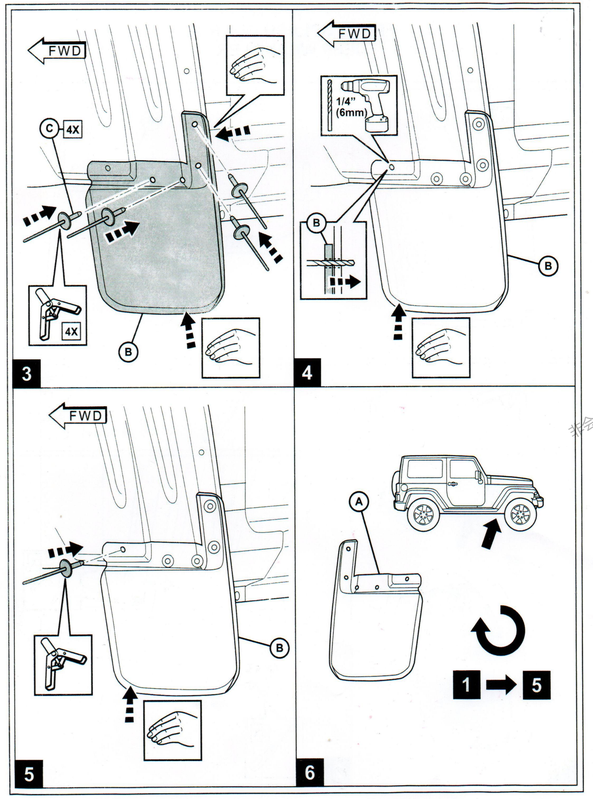

REAR SPLASH GUARDS
JEEP WRANGLER

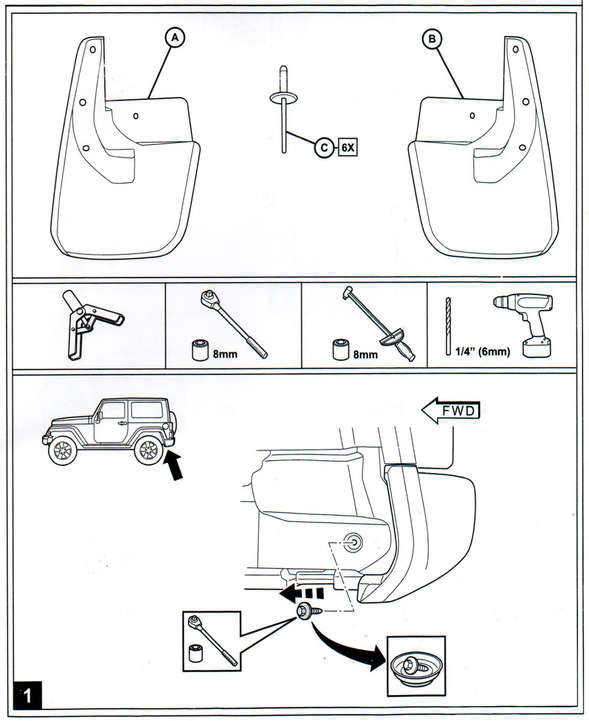

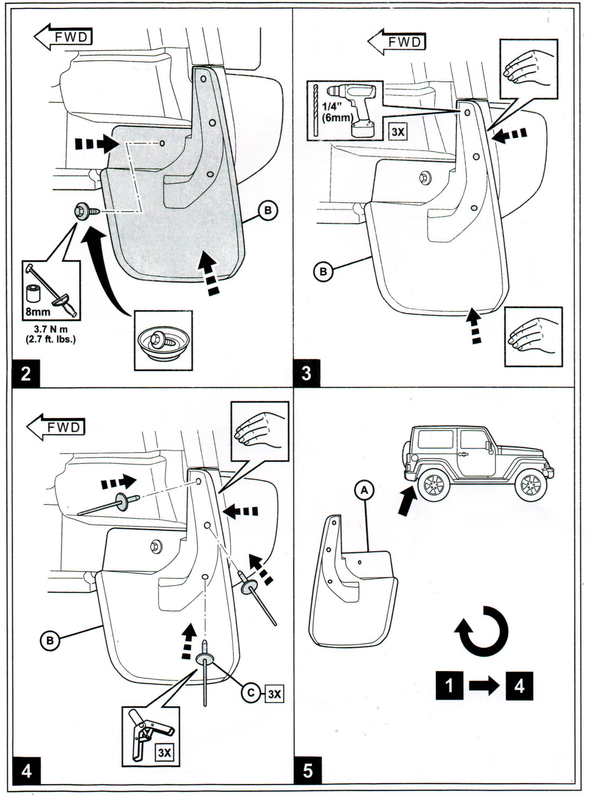

非会员水印